Antennas for Radio Astronomy

S.Ananthakrishnan,
Dept. of Electronic Science,
Pune University, Pune, India 411007

Abstract:
Radio Astronomy has made very significant contributions to human knowledge by discovering such exotic phenomena as quasars, pulsars, active galactic nuclei, superluminal motion and cosmic microwave background. These have been possible by the ever increasing sensitivity and angular resolution of the radio telescopes over the last six decades. Building large collecting area for antennas requires innovative technology to keep the costs down. A good example is the Giant Meter-wave Radio Telescope (GMRT) built near Pune in Western India. Similarly, increasing the resolution has required sophistication in radio interferometry and sensitive electronics and photonics. The next big push is the million square meter area radio telescope called the Square Kilometre Array (SKA), spread over hundreds to thousands of kms. operating over a very large frequency range of 70 MHz to 10 GHz for mid-SKA and 25 MHz for full SKA. This is being built by a global consortium of radio astronomers involving as many as 19 countries and is expected to be completed around 2020. In this tutorial, we will give the background and review the different designs of antennas that are being made as prototypes for SKA and the electronics that goes with them and summarize the current status of progress in radio astronomical techniques.

Introduction:

Radio astronomy shows that one can observe radio emission from many celestial objects both due to thermal emission processes as well as non-thermal emission (synchrotron emission) processes. One also observes line emission due to hyperfine transition in various atomic levels like in Hydrogen (HI) or OH maser, etc. Radio waves also penetrate dust and gas and are unaffected unlike optical wavelengths. Hence, one can peer deep into the central area of active galactic nuclei (AGNs). One can also gain insights into the complex pulsar mechanisms in neutron stars. In addition, radio telescopes even on the ground can provide the highest resolution at the level of ~ 10^{-4} arcsec. at the highest radio frequencies. All these have made the study of cosmic objects using radio astronomy telescopes and techniques very interesting and exciting.

Angular resolving power of a radio telescope is given by $\sim\lambda/D$ radians, where λ is the wavelength of observation and D is the aperture diameter. Since radio window using which a radio astronomer looks at the sky is in the wavelength range of a few mms. to several meters, the angular resolutions are, in general poor, as compared to even a small optical telescope. To get arcsec resolutions, in say, meter wavelengths, radio astronomers need a radio telescope which is a few hundred kms. in diameter! Since this is not practical, the principle of radio interferometry is used, which is analogous to Michelson's Optical interferometry in which, one uses an optical system to bring two signals together on to a detector. Depending on the relative phases, the signals either reinforce or cancel each other. Interference in this manner produces interferometer fringes. In radio astronomy, the signals from a distant compact radio source are received by separate radio telescopes at the ends of a baseline and, after conversion to lower frequencies, transmitted through cables, added and detected, digitized /cross correlated and recorded for on-line/off-line processing. The term fringe in radio astronomy refers to the correlated portions of the signals. Thus, in this mode the effective resolution corresponds to that of the baseline separating the receivers and the interferometer measures one Fourier component of the radio image. Martin Ryle and others showed that as the earth rotates, two antennas placed on the earth offer different projected baselines to a radio source at every instant and that by combining many such baselines one can synthesize a large aperture. For his pioneering research into this earth rotation aperture synthesis technique, Ryle was awarded the Nobel Prize in 1974.

The Current scenario:

The two major aperture synthesis instruments in the world today are the Very Large Array in the

978-1-4244-4819-7/09/$25.00 ©2009 IEEE

USA, [1] and the Giant Metrewave Radio Telescope (GMRT), [2] [3], near Pune, India.

Fig. 1a (Ref: NRAO archives)

While the former (Fig. 1 a) is the pre-eminent instrument in the wavelength range of about 1 cm to 20 cm, since 1980, the GMRT (Fig. 1 b), in the wavelength range of 20 cms. to ~2 meters (1500 MHz to 150 MHz) became operational about 10 years ago. It is being now extended down to 50 MHz. Thus these are complementary instruments. Further, GMRT antennas have been built using innovative methods to keep the costs significantly lower in terms of its large collecting area. We briefly describe the GMRT below.

The GMRT consists of 30 antennas of 45 m. in diameter and in its range of frequencies, this indigenously produced antenna array is the most sensitive radio telescope in the world. GMRT antennas are spread over 25 km in diameter, with about half the antennas located in a central area of 1 km x 1 km in an approximate `Y' configuration, like the VLA. The array schematic is as shown in Fig. 2 a. Each GMRT antenna is an alt-az mounted dish having 16 parabolic frames. The reflecting paraboloid surface consists of a `Stretched mesh Attached to Rope Trusses (SMART) (Fig. 2 b). The size of this stainless steel mesh varies from 10 mm x 10 mm in the 1/3rd inside portion to 20 mm x 20 mm in the outer 1/3rd portion of the dish. The efficiency of the dish is ~ 60% for < 1 GHz to 40% at 1.4 GHz. The declination coverage is from -55^0 to + 90^0. The turret on the prime focus enables rotation of different feeds at 150, 325, 610/235 and 1000-1430 MHz bands and aligns any one of them for observation.

Fig. 1b (GMRT archives)

The synthesized beam of GMRT varies from ~ 2 arcsec. at 1420 to ~ 20 arcsec at 150 MHz. The sensitivity for full synthesis for a 16 MHz bandwidth varies from <30 μJy (1μJy=10^{-32}W.m^{-2}.Hz^{-1}) at 1420 MHz to ~500 μJy at 150 MHz. The GMRT is currently heavily used by scientists from all over the world for various astrophysical studies.

Near Future scenario:

Although VLA and GMRT are highly sensitive radio astronomy synthesis arrays, they have used 20th century technology. For producing transformational science in astronomy what one needs is an instrument which is about 50 to 100 times more sensitive than all the existing arrays.

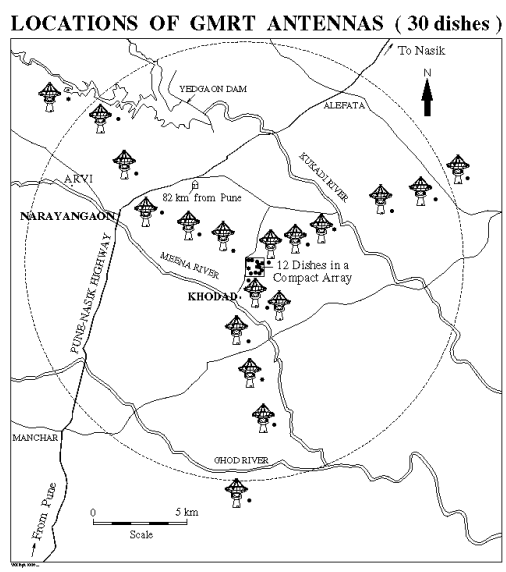

Fig. 2a (Swarup, G. et al., 1991)

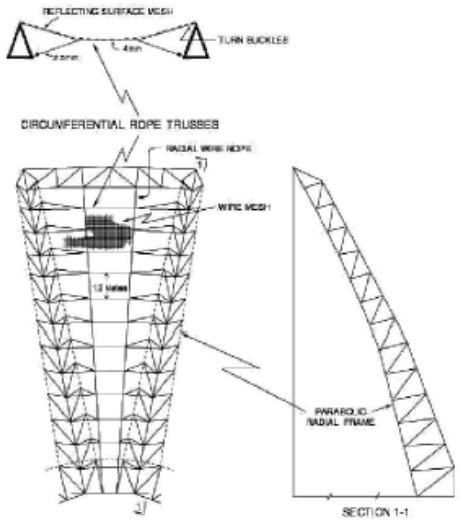

Fig. 2 b. The SMART concept.

Therefore, a consortium of 19 countries have joined together to design a synthesis array that will have a million square meters of collecting area and which has angular resolution that is orders of magnitude better than VLA or GMRT.
This has been named as the Square Kilometre Array (SKA) and involves designing low cost antennas in large numbers and also designing very sensitive yet economical electronics and photonic components.
The extraordinary progress witnessed in radio astronomy in the last several decades now places a high threshold requirement on any new array to be built. In keeping with this aim, the specification of SKA requires that the array be not only the most sensitive one in the world, but also has very high resolution as well as a large field of view of a few hundred square degrees at low frequencies to at least 1 square degree at the high end of the frequency range. While the configuration of the array is somewhat similar to GMRT, with half of the area being within a 5 km. diameter circle, the remaining half of SKA will be extending over a few thousand kms. in a progressive manner [4]. The sensitivity of any such array is a function of the system temperature and inversely as the effective area of the total telescope. In the case of SKA, this has been specified as 10^{-4} K/m^2 and is orders of magnitude higher than what can be achieved by VLA or GMRT. Similarly, there are other specifications such as the speed with which the SKA surveys objects in the sky with a high resolution also imposes tight restrictions on the over all design. The achievable sensitivity is also dependent on the over all bandwidth of the array. This is specified as a few GHz at present. For more details, the reader is referred to [5].
The kind of antennas that may be built for SKA is still under active design. Several prototypes have been built, including a large number of small dishes, aperture arrays using the Vivaldi tapered slot end-fire elements and Focal Plane arrays [4.].
In India, the design of a Pre-loaded Parabolic Dish of 12-15 m dia. was initiated by Swarup [6]. A modified idea called Braced Dome Dish (BDD) was also evolved by the author and his colleagues at the National Centre for Radio Astrophysics, with the help of Tata Consulting Engineers, Mumbai. Both the designs were developed and fabricated. The PPD dish of 12 m dia., finalized by Uday Shankar and colleagues at RRI, is located in Gauribidanur, while the BDD antenna of 15 m dia. is located in the NCRA campus; it has 6 x 6 mm² SS mesh on an aluminum back up structure and steel mounts and has a surface rms accuracy of ~1.5 mm. It costs around Rs 7 million, with the servo systems but without the prime focus feeds (Fig.3a). A broad band feed for the same has been designed with the help of ISRO scientists and is now being refined in the author's lab. and covers a frequency range of 1 - 3 GHz (Fig. 3b). While these dishes are no longer being considered for SKA due to the need for higher frequency operations, many such developments in many groups have taken place all over the world, in finding suitable low cost designs for SKA. These have also helped raise the technology competencies for the local groups involved, as a by-product. When the final design for SKA emerges in the next few years, it will mark a significant milestone for the SKA project.

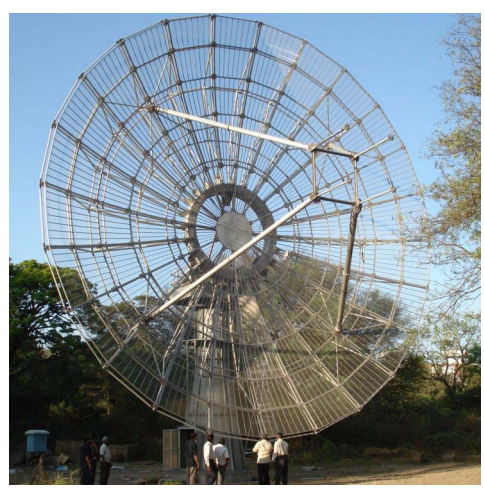

Fig. 3a. The 15 m dish antenna at NCRA, Pune

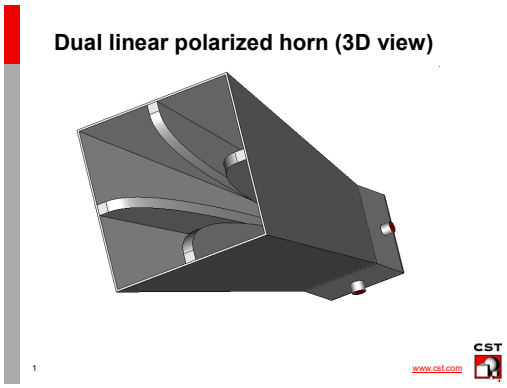

Fig.3b. The horn designed by ISRO scientists [7]

The demand on electronics for SKA is equally severe. Depending on the design chosen, large numbers of very reliable and robust sub-systems are essential for sustained 24x7 operation of the electronics systems of SKA. Equally challenging will be the transportation of the data and the back end correlators for signal processing as well as the software DAS required for the array.

Although, the well known Moore's law helps in getting more computing power at roughly the same cost year after year, the software and hardware costs will very much depend on the kind of designs chosen for each part of SKA. The over all budget required for SKA is significant being about 2 billion dollars. In order to ensure that the cost and time over runs are not high, a lot of careful trade-offs must be done between the science goals that are to be achieved and the final flexible design that helps in reaching these goals. Thus, one needs to:

Fig. 4. Sketch of a possible configuration for SKA [SKA OA archives]

(i) Develop designs for efficient low cost antennas, mounts, feeds & receivers over the entire range of SKA with the maximum field of view (FOV).
(ii) The entire signal processing chain has to be optimized, and
(iii) The site infrastructure and logistics have to be fully evaluated so that an accurate cost estimate and time line for implementing the over all SKA project is obtained.

Conclusion:

The SKA project, scheduled for 2020, is an exceedingly challenging project for both hardware and software professionals from across the world and will mark a watershed in the way large experimental science projects are planned. In view of the tremendous global cooperation that SKA has received from its inception, one can be very hopeful that all these issues can be tackled.

Acknowledgments: The author is grateful to the SKA team, especially Prof. Peter Hall for helpful comments on the material for this tutorial. He also thanks VLA, SKA and GMRT authorities for using archival /web material and the latter, again, for permission to use a photo of the 15 m dish antenna.

References:

[1] P.J. Napier, A.R. Thompson, and R.D. Ekers, "The Very Large Array: Design and Performance of a Modern Synthesis Radio Telescope," Proc.IEEE, vol 71, No.11, p 295, 1983.
[2] G. Swarup, S. Ananthakrishnan et al., "The Giant Metrewave Radio telescope", Current Science, vol 60, p 95, 1991.
[3] S. Ananthakrishnan, "The Giant Metrewave Radio telescope (GMRT)," Proc. 29th Int'l Cosmic Ray Conference, vol 10, p 25, 2005
[4] P.J. Hall, R.T. Schilizzi, P.E.F. Dewdney and T.J.W. Lazio, "The Square kilometer Array Radio Telescope," Radio Science Bulletin, vol 326, p 4, 2008.
[5] P.E.F. Dewdney, P.J. Hall, R.T. Schilizzi and T.J.W. Lazio, "The Square Kilometre Array," Proc. IEEE, vol 97, No.8, p 1482, 2009.
[6] G.Swarup and Uday Shankar, SKA white papers, 2002.
[7] V.K.Lakshmeesha and V.V.Sreenivasan (Private Communication), 2007.